TVG12864-12 (128x64 DOTS) 1/64DUTY, 1/6BIAS

1.DIMENSION OUTLINE

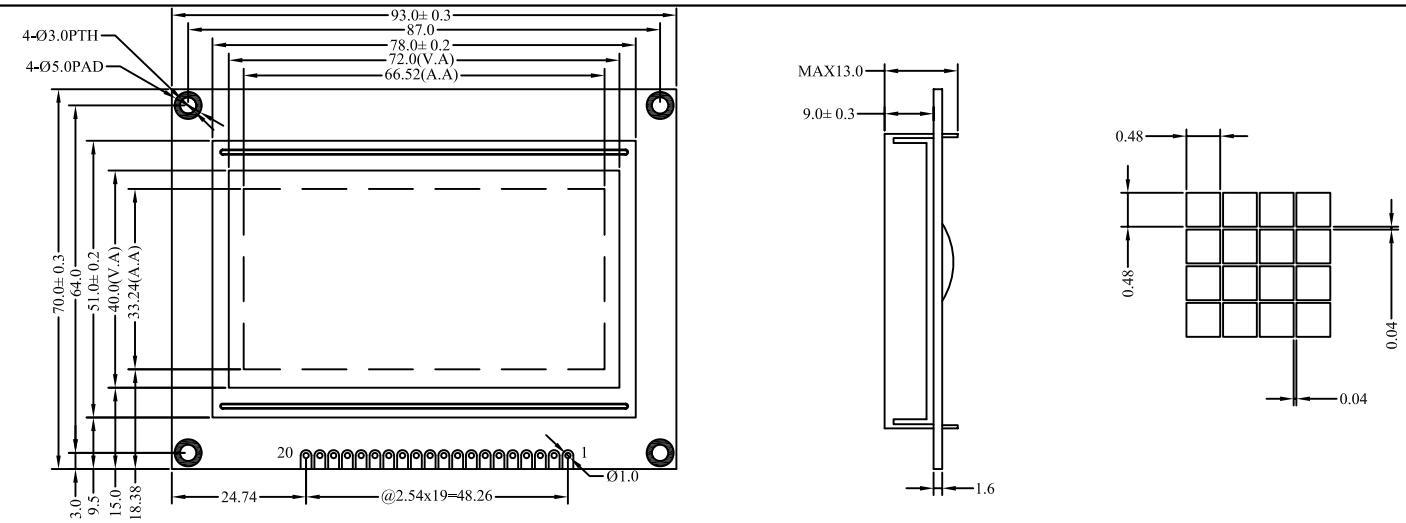

2.MECHANICAL SPECIFICATIONS

ITEM	SPECIFICATIONS	ITEM	REMARK
Modeule Size(L×W×H)	93.0×70.0×13.0	mm	Reference Dimensional Outline
View Area(W×H)	72.0×40.0	mm	
Effective V/Area	66.52×33.24	mm	
Number of Characters	128×64	-	
Dot Pitch(W×H)	0.52×0.52	mm	
Dot Size(W×H)	0.48×0.48	mm	
Weight (Reflective/Led)	-	g	

3.ABSOLUTE MAXIMUM RATINGS

ITEM	SYMBOL	CONDITION	STANDARD	
			MIN	MAX
Logic Voltage	V_{DD}	Ta=25℃	-0.3V	5.5V
LCD Voltage	V_{LCD}		-0.3V	7V
Input Voltage	V_I		-0.3V	V_{DD}+0.3V
Operation Temperature	T_{OP}	—	-20℃	70℃
Storage Temperature	T_{St}	—	-30℃	80℃

4.BLOCK DIAGRAMMECHANICAL

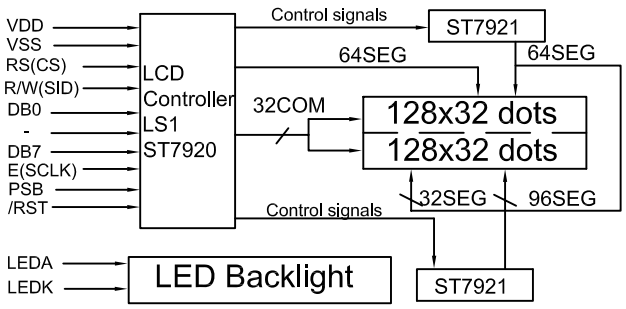

5.LED BACKLIGHT SPECIFICATIONS

ITEM	SYMBOL	TYPE	MAX	UNIT
Ta=25℃				
Forward Voltage	V_f	4.1	4.3	V
Forward Current	I_f	360	—	mA
Emission Vave Length	λ_P	568	—	nm

6.INTERFACE PIN CONNECTIONS

ITEM	SYMBOL	LEVEL	FUNCTIONS
1	VSS	0V	Power Ground
2	VDD	+5V	Power supply for logic
3	V0	—	Contrast adjust
4	RS(CS)	H/L	H:data L:command
5	RW/(SID)	H/L	H:read L:write
6	E/(SCLK)	H.H→L	Enable singnal
7-14	DB0-DB7	H/L	Data Bus
15	PSB	H/L	H:Paraller mode L:serial mode
16	NC	—	NO connection
17	/REST	L	Reset signal
18	NC	—	NO connection
19	A or K	+5V or 0V	Power supply for LED backlight
20	K or A	0V or 5V	

7.ELECTRICAL CHARACTERISTICS

ITEM	SYMBOL	MIN	TYPE	MAX	UNIT
Ta=25℃					
Logic Power	V_{DD}	4.5	5	5.5	V
Input High Voltage	V_{IH}	0.7VDD	—	V_{DD}	V
Input Low Voltage	V_{IL}	-0.3	—	0.6	V
Output High Voltage	V_{OH}	0.8VDD	—	VDD	V
Output Low Voltage	V_{OL}	0	—	0.4	V
Logic Current	I_{DD}	—	3	5	mA
Operation Voltage For LCD	V0-GND	—	5	—	V