1.DIMENSION OUTLINE

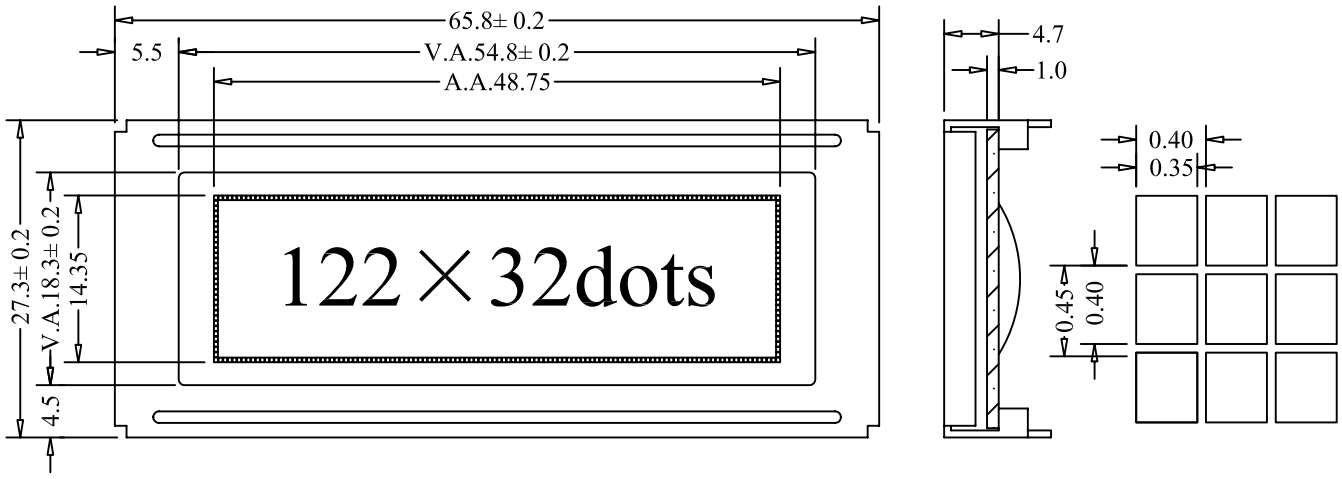

2.MECHANICAL SPECIFICATIONS

ITEM	SPECIFICATIONS	ITEM	REMARK
Module Size(L×W×H)	65.8×27.3×8.4	mm	Reference Dimensional Outline
View Area(W×H)	54.8×18.3	mm	
Effective V/Area(W×H)	48.75×14.35	mm	
Number of Dots	122×32	—	
Dot Pitch(W×H)	0.40×0.45	mm	
Dot Size(W×H)	0.35×0.40	mm	
Weigh(Reflective/LED)	—	g	

3.ABSOLUTE MAXIMUM RATINGS

ITEM	SYMBOL	CONDITION	STANDARD	
			MIN	MAX
Logic Voltage	V_{DD}	Ta=25℃	-0.3V	7V
LCD Voltage	V_{LCD}		-0.3V	—
Input Voltage	V_I		-0.3V	V_{DD}+0.3V
Operation Temperature	T_{OP}	—	-20℃	70℃
Storage Temperature	T_{ST}	—	-20℃	80℃

4.BLOCK DIAGRAM MECHANICAL

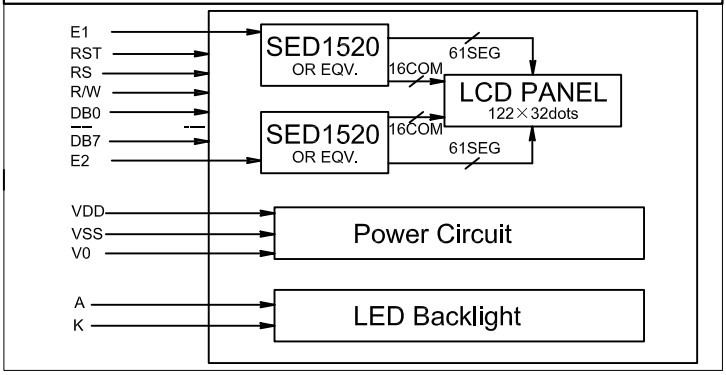

5.LED BACKLIGHT SPECIFICATIONS

ITEM	SYMBOL	TYPE	MAX	UNIT
Ta=25℃				
Forward Voltage	V_f	4.1	4.3	V
Forward Current	I_f	140	—	mA
Emission Vave Length	λ_P	572	—	nm

6.INTERFACE PIN CONNECTIONS

ITEM	SYMBOL	LEVEL	FUNCTIONS
1	VDD	+5V	Power Supply For Logic
2	VSS	0V	Power Ground
3	V0	—	Contrast ajust
4	RST	H/L	Reset Signal
5	E1	H/L	Enable Signal For Chip A
6	E2	H/L	Enable Signal For Chip B
7	R/W	H/L	H:read L:write
8	RS	H/L	H:data L:command
9-16	DB0-DB7	H/L	Data Bus
17	NC	—	No Connection
18	NC	—	No Connection

7.ELECTRICAL CHARACTERISTICS

ITEM	SYMBOL	MIN	TYPE	MAX	UNIT
Ta=25℃					
Logic Power	V_{DD}	4.75	5	5.25	V
Input High Voltage	V_{IH}	2	—	V_{DD}	V
Input Low Voltage	V_{IL}	0	—	0.8	V
Output High Voltage	V_{OH}	2.4	—	V_{DD}	V
Output Low Voltage	V_{OL}	0	—	0.4	V
Logic Current	I_{DD}	—	—	1.5	mA
Operation Voltage For LCD	V_{DD}-V_O	—	5	—	V